AUDIOTECHNIK

COX12 MKII

Coaxial point source



PRODUCT FEATURES

- 12" woofer (3" VC), horn-loaded 1" PEN compression driver(1.75" VC)
- 2-way coaxial system
- 400 W continuous power handling (1600 W peak)
- Up to 136 dB max. SPL
- 98 dB sensitivity (1 W/1 m)
- 65 Hz - 19 kHzusable frequency range
- SpeakON® and 4-pin Phoenix connectors
- Wooden enclosure with polyurea coating
- Multifunctional enclosure design with only 19.5 kg weight

APPLICATIONS

Auditoriums, gyms, clubs, event locations, on stage monitors, side and front fills, architectural sound and PA systems.

PRODUCT DRAWING

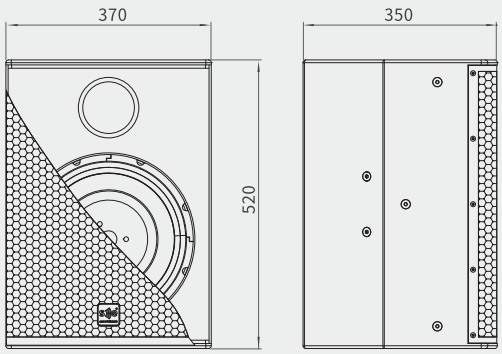

PRODUCT DESCRIPTION

The COX 12 MKII features an advanced design and combines the tweeter and mid-bass driver in a single unit with a coaxial structure for consistent sound quality and a compact form factor. The passive COX 12 MKII provides an extended low frequency range and high power handling. The COX 12 MKII has a multifunctional design that allows for versatile use on the floor, standing, suspended, on speaker stands or wall-mounted. The COX 12 MKII is an excellent option for installations, mobile applications, and stage monitoring due to its available accessories and system integration capabilities.

SAFETY NOTE Please observe the operating instructions as well as the applicable regulation-sand rules for safe use and operation. Also observe the maximum permissible-number of modules in a ground stack or flown system.

SPECIFICATIONS

ACOUSTICAL	
Frequency Response (-3 dB)[1]	134 Hz - 17 kHz
Frequency range (-10 dB)[1]	65 Hz - 19 kHz
Coverage angles (-6 dB) [H x V][2]	80° x 80°
Nominal impedance	8 Ω
Sensitivity[1]	98 dB
Peak power	1600 W
Continuous power[3]	400 W
Maximum Peak SPL[4]	136 dB
System type	2-way coaxial system
Crossover frequency	1.3 kHz
Transducers	Coaxial driver with:LF: 1 x 12" driver (3" voice coil), HF: 1" PEN compression driver (1.75" voice coil)
Enclosure type	Vented box
Connectors	Neutrik speakON® NL4, Phoenix 4-Pin Verbinder MSTB
Wiring	speakON® NL4: Pins 1+ / 1- : driver; Pins 2+ / 2- : N.C. Phoenix: Pins 1+ / 1- : driver; Pins 2+ / 2- : link
MECHANICAL	
Product dimensions [H x W x D](Including rigging)	520 x 370 x 350 mm
Weight	19.5 kg
Packaging dimensions [H x W x D]	633 x 470 x 450 mm
Total weight	22 kg
Cabinet	15 mm plywood
Cabinet finishing	Black polyurea coating
Grille	Powder coated perforated steel
Hardware	1 x rear handle embedded in cabinet 1 x bottom 36 mm socket for pole mounting
Rigging	5 x M8 for mounting on top and sides 3 x M8 for mounting at the bottom 2 x M8 for mounting on the rear
ACCESSORIES	
Wall Mounting Bracket	COX12 WB
Pole bar	SPS 20

[1] Full space, 1W / 1m, on axis
[2] Coverage angles at 4 kHz
[3] According to EIA-426B Standard (based on RMS Voltage)
[4] Max Peak SPL = Sensitivity + $10\log_{10}$(Continuous Power) + 12 dB Crest Factor

All product specifications are subject to change without prior notice.

Version 2026/10

DE EN ES FR IT 中文